SEPTIC TANK REQUIREMENTS:

1) FIRST COMPARTMENT: 660 GALLONS
2) SECOND COMPARTMENT: NOT REQUIRED
3) PROVIDED: 1500 GALLON SEPTIC TANK WITH PUMP VAULT

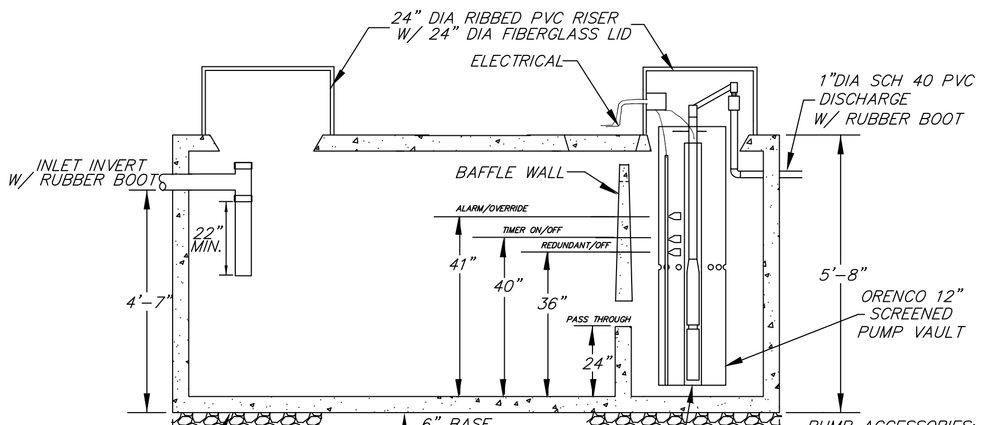

PRE-CAST TANK FROM E.F. SHEA TK-M15002CWS (OR EQUAL)
ORENCO PF SERIES HIGH-HEAD PUMP
LEVEL CONTROLS (IN SEPTIC TANK):
THREE (3) ORENCO MECHANICAL "A" FLOAT SWITCHES

PUMP ACCESSORIES:
*PROVIDED FROM CLEARWATER INDUSTRIES
ALARM SHALL BE ON SEPARATE CIRCUIT FROM PUMPS
PUMP VAULT COMPONENTS SHALL BE OBTAINED FROM CLEARWATER INDUSTRIES, IPSWICH, MA (978) 356-0779.

EMERGENCY STORAGE

INSIDE DIMENSIONS=10.33' X 5.17'

STORAGE= 10.33'X5.17'X1/12'X7.48gal/cft = 33gal/in

ALARM @ 41", INLET INVERT @ 51"

STORAGE ABOVE ALARM = (51"-41")33gal/in = 330 gallons

1500 GALLON SEPTIC TANK WITH PUMP VAULT DETAIL

NOT TO SCALE

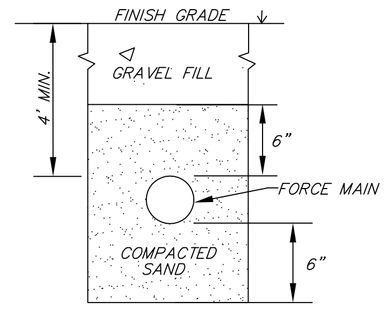

1) TRENCH SHALL BE PLACED IN UNDISTRUBED SUBGRADE OR COMPACTED TO 95% PER ASTM D-1557

FORCE MAIN TRENCH

310 CMR 15.221(6)
(NOT TO SCALE)

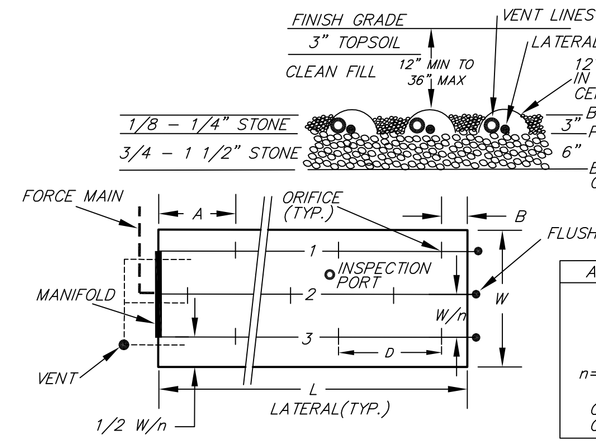

ABBREVIATION	LENGTH
A	27 IN
B	9 IN
D	36 IN
L	24 FT
W	15 FT
n=# LATERALS	3
W/n	5 FT
ORIFICES/LAT	10*
ORIFICE DIA.	1/4 IN

***INCLUDES 2-ORIFICES DRILLED THROUGH PIPE INVERT (SEE NOTE #4 BELOW)**

1) BOTTOM OF FIELD SHALL BE LEVEL AND SCARIFIED PRIOR TO PLACING STONE.
2) STONE SHALL BE DOUBLE WASHED.
3) HAND-HOLDS SHALL BE PLACED OVER FLUSHING CONNECTIONS WITH COVERS AT FINISH GRADE. (SEE FLUSHING CONNECTION DETAIL)
4) (8) ORIFICES IN EACH LATERAL SHALL BE DRILLED IN THE CROWN OF THE PIPE. THE 2nd AND 7th ORIFICE SHALL BE DRILLED THROUGH THE INVERT TO ALLOW FOR PIPE DRAINAGE.

PRESSURE DOSED LEACH FIELD DETAIL:

310 CMR 15.252
(NOT TO SCALE)

NOTES:

1. THIS PLAN IS INTENDED ONLY FOR THE CONSTRUCTION OF A SEPTIC SYSTEM TO SERVE THE SITE. NO OTHER USE OF THIS PLAN IS AUTHORIZED. PROPERTY LINES SHOWN HERE-ON ARE APPROXIMATE AND INTENDED ONLY TO SHOW THAT MINIMUM SETBACKS HAVE BEEN MET. NO BOUNDARY SURVEY WAS PERFORMED IN PREPARATION OF THIS PLAN.
2. CONTRACTOR SHALL NOTIFY DIGSAFE AT 1-888-DIG-SAFE (888-233-7233) AT LEAST 72 HOURS PRIOR TO ANY EXCAVATION.
3. CONTRACTOR SHALL MAKE THEMSELVES AWARE OF ALL CONSTRUCTION REQUIREMENTS ASSOCIATED WITH THE JOB.
4. ANY AND ALL REVISIONS TO THE APPROVED PLAN SHALL BE APPROVED BY THE DESIGN ENGINEER AND THE APPROPRIATE TOWN REPRESENTATIVE.
5. CONTRACTOR SHALL BE RESPONSIBLE FOR THE PROJECT WITH RESPECT TO SAFETY METHODS, CONSTRUCTION METHODS AND SUPERVISION OF WORKERS.
6. CONTRACTOR SHALL OBTAIN ALL NECESSARY PERMITS FOR THE PROJECT, AND SHALL BE A LICENSED SEPTIC INSTALLER, IN THE TOWN IN WHICH THE SEPTIC SYSTEM IS BEING INSTALLED.
7. CONTRACTOR SHALL VERIFY LOCATION AND ELEVATION OF BENCHMARKS, PRIOR TO CONSTRUCTION. DESIGN ENGINEER SHALL BE NOTIFIED OF ANY DISCREPANCIES IN THE BENCHMARK ELEVATIONS.
8. CONTRACTOR SHALL CONFIRM THAT THE DESIGN PLAN DETAILS ARE CONSISTENT WITH THE CURRENT MANUFACTURER'S SPECIFICATIONS.
9. APPROVAL OF THE SEPTIC DESIGN, ISSUANCE OF A DISPOSAL SYSTEM CONSTRUCTION PERMIT AND ISSUANCE OF THE CERTIFICATE OF COMPLIANCE SHALL NOT BE CONSTRUED AS A GUARANTEE THAT THE SEPTIC SYSTEM WILL FUNCTION SATISFACTORILY.
10. BACKWASH FROM A WATER SOFTENER SHALL NOT BE DISCHARGED INTO A SEPTIC SYSTEM.
11. ALL WORK SHALL COMPLY WITH 310CMR15.000 AND LOCAL BOARD OF HEALTH REGULATION, UNLESS VARIANCES/WAIVERS HAVE BEEN APPROVED.
12. ALL WORK OUTSIDE OF THE BUILDING THAT IS LESS THAN 10 FEET FROM THE OUTSIDE FACE OF THE OF THE BUILDING, SHALL CONFORM TO 248CMR2.00, THE STATE PLUMBING CODE.
13. ALL SEPTIC SYSTEM COMPONENTS ARE GREATER THAN 400 FEET FROM SURFACE WATER SUPPLIES AND GREATER THAN 200 FEET FROM ANY TRIBUTARY TO A SURFACE WATER SUPPLY.
14. THERE ARE WELLS (ONSITE AND ABUTTING) WITHIN 150 FEET OF THE SOIL ABSORPTION SYSTEM.
15. THERE ARE WETLANDS WITHIN 100 FEET OF THE SOIL ABSORPTION SYSTEM AND SEPTIC COMPONENTS. THESE PLANS SHALL ACCOMPANY A NOTICE OF INTENT FILED WITH THE BOXFORD CONSERVATION COMMISSION AND THE MASSACHUSETTS DEPARTMENT OF ENVIRONMENTAL PROTECTION.
16. ALL SEPTIC COMPONENTS SHALL BE MARKED WITH MAGNETIC MARKING TAPE OR A COMPARABLE MEANS IN ORDER TO LOCATE THEM ONCE BURIED.
17. SITE COMPLIES WITH 310CMR15.214: NITROGEN LOADING LIMITATIONS.
18. FILL MATERIAL FOR SYSTEMS CONSTRUCTED IN FILL SHALL CONSIST OF ASTM C-33 SAND AND SHALL CONFORM TO 310CMR15.255(3).
19. CONTRACTOR SHALL REMOVE FILL, A & B SOIL HORIZON(S) AND OTHER DELETERIOUS MATERIAL WITHIN 5 FT OF SOIL ABSORPTION SYSTEM AND REPLACE WITH ASTM C-33 SAND UPTO BREAKOUT ELEVATION.
20. COMPONENTS SHALL NOT BE BACKFILLED WITHOUT INSPECTION BY THE BOARD OF HEALTH AND ENGINEER, AND PERMISSION OBTAINED FROM EACH.
21. CONTRACTOR SHALL VERIFY THAT THE SEPTIC TANK CAN BE CONNECTED TO THE BUILDING SEWER AS SHOWN, WITH A MINIMUM 2% SLOPE. IF NOT, CONTRACTOR SHALL NOTIFY ENGINEER, IMMEDIATELY.
22. THE EXISTING SEPTIC SYSTEM SHALL BE EITHER CRUSHED AND FILLED WITH CLEAN FILL, OR REMOVED, AS PER 310CMR15.00.
23. THE LEACH FIELD LATERALS SHALL BE FLUSHED ANNUALLY TO MAINTAIN A PROPERLY WORKING SYSTEM.
24. THE DESIGN AND INSTALLATION SHALL COMPLY WITH THE MA DEP APPROVAL OF THE WATERLOO BIOFILTER DATED: NOVEMBER 5, 2012, AND THE STANDARD CONDITIONS FOR SECONDARY TREATMENT UNITS CERTIFIED FOR REMEDIAL USE EFFECTIVE DATE: NOVEMBER 30, 2016.
25. AN OPERATION AND MAINTENANCE CONTRACT IS REQUIRED FOR THE WATERLOO BIOFILTER FOR THE LIFE OF THE SYSTEM, AS PER DEP APPROVAL.
26. PRIOR TO OBTAINING A CERTIFICATE OF COMPLIANCE FROM THE GEORGETOWN BOARD OF HEALTH THE SYSTEM OWNER SHALL RECORD A DEED NOTICE AT THE ESSEX SOUTH REGISTRY OF DEEDS DISCLOSING THE EXISTENCE OF THE ALTERNATIVE ON-SITE SYSTEM INCLUDING THE SECONDARY TREATMENT UNIT.
27. PRIOR TO ISSUANCE OF A CERTIFICATE OF COMPLIANCE BY THE LOCAL APPROVING AUTHORITY, THE SYSTEM INSTALLER AND DESIGNER MUST PROVIDE, IN ADDITION TO THE CERTIFICATIONS REQUIRED BY TITLE 5, CERTIFICATIONS IN WRITING TO THE LOCAL APPROVING AUTHORITY THAT THE SYSTEM HAS BEEN CONSTRUCTED IN COMPLIANCE WITH THE TERMS OF THE APPROVAL.
28. THE INSTALLER SHALL MAINTAIN ON-SITE AT ALL TIMES DURING CONSTRUCTION, A COPY OF THE APPROVED PLANS, THE OWNER'S MANUAL, THE O&M MANUAL, AND A COPY OF THE APPROVAL. THE SYSTEM OWNER AND THE SYSTEM OPERATOR SHALL MAINTAIN COPIES AFTER CONSTRUCTION IS COMPLETED.
29 ENTIRE SITE IS WITHIN THE 200 FOOT RIVERFRONT AREA.

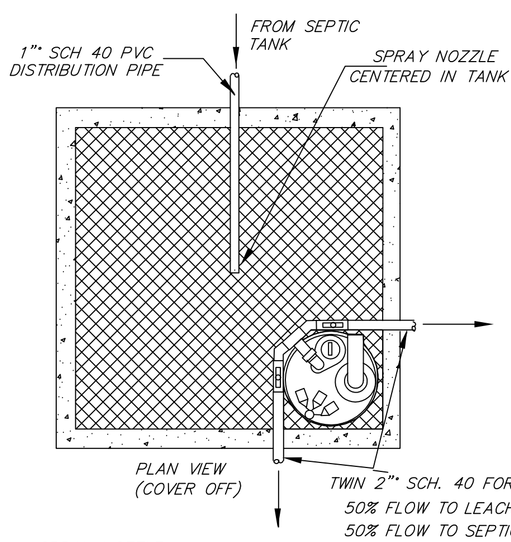

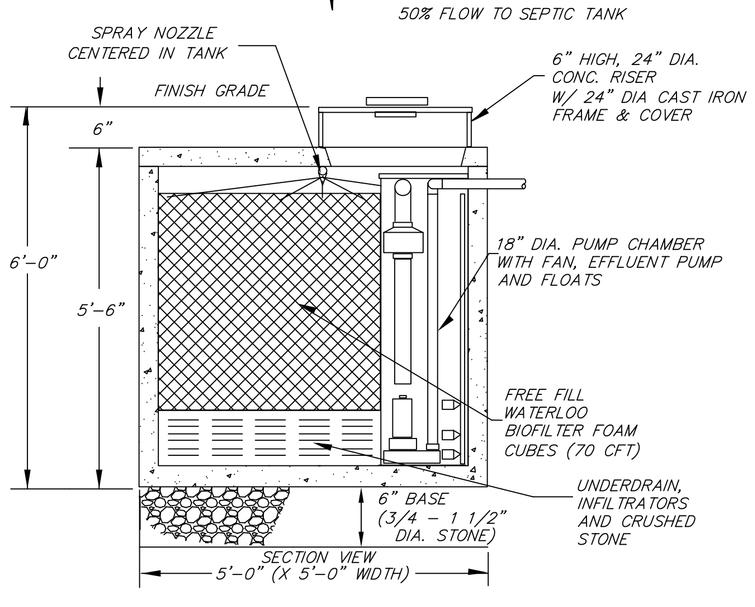

PUMP SPECIFICATIONS:
MANUFACTURER: LIBERTY PUMPS
MODEL #: LE41M
NO. REQUIRED: ONE (1)
HORSEPOWER: 0.4
PHASE: 1
FULL AMPS 12
DISCHARGE: 2"

PUMP ACCESSORIES:
*PROVIDED FROM CLEARWATER INDUSTRIES
ALARM SHALL BE ON SEPARATE CIRCUIT FROM PUMPS
ALL WATERLOO BIOFILTER COMPONENTS SHALL BE OBTAINED FROM CLEARWATER INDUSTRIES, IPSWICH, MA (978) 356-0779.

WATERLOO BIOFILTER™ UG-330

(Design Flow = 330 gpd)

NOT TO SCALE

UNIT DELIVERED PRE-ASSEMBLED

CALCULATE EQUIVALENT LENGTH:

FRICTION LOSSES IN PUMP CHAMBER:

QTY	DIA (IN)	LOSS/FITTING (FT)	FITTING	TOTAL
1	2.129	5.0	90° BEND	5.0 FT
0	2.129	2.5	45° BEND	0.0 FT
1	2.129	14.0	CHECK VALVE	14.0 FT
1	2.129	1.2	GATE VALVE	1.2 FT
TOTAL LOSS		⇨	21.0 FT	20.2 FT

FRICTION LOSSES IN PIPE RUN:

QTY	DIA (IN)	LOSS/FITTING (FT)	FITTING	TOTAL
1	2.129	5.0	90° BEND	5.0 FT
2	2.129	2.5	45° BEND	5.0 FT
0	2.129	2.0	22.5° BEND	0.0 FT
1	2.129	12.0	TEE (Side In/Out)	12.0 FT
			LENGTH OF RUN	180.0 FT
			MISC. PIPE	18.0 FT
TOTAL LOSS		⇨	220.0 FT	220.0 FT

TOTAL EQUIV. LENGTH: ⇨ ⇨ 241 FT

PRESSURE DISTRIBUTION SYSTEM PARAMETERS:

GENERAL	Unit	Value	Comment
Dosing Frequency	doses / day	8	
Min. Volume per Dose	gallons	41	
No. of Laterals		3	
FORCE MAIN			
Length of Force Main	feet	180	
Total Equivalent Length	feet	241	
Nominal Inside Diameter	inches	2.129	
MANIFOLD			
No. of Segments		2	
Length of Manifold		10	
Segment Equivalent Length	feet	10	
Nominal Inside Diameter	inches	2	
		2	(1=include 2=exclude)
EACH LATERAL			
Length of Lateral	feet	24	
Nominal Inside Diameter	inches	1.25	
Min. Residual Pressure	feet	3.0	
Orifice Diameter	inches	0.25	0.19=3/16;0.31=5/16; 0.44=7/16;0.56=9/16
No. of Orifices		10	Includes 2 Orifices in pipe invert
Orifice Spacing	inches	36	maximum = 60 inches

COMPOSITE SYSTEM CURVE

Flow (gpm)	Static Head (feet)	Residual Press. at Distal End	TDH (feet)
35	4.4	3.0	**13.2**
40	4.4	3.0	**14.8**
45	4.4	3.0	**16.6**
50	4.4	3.0	**18.6**
55	4.4	3.0	**20.8**

Plot Flow and TDH on Pump Curve to determine operating point of pump.

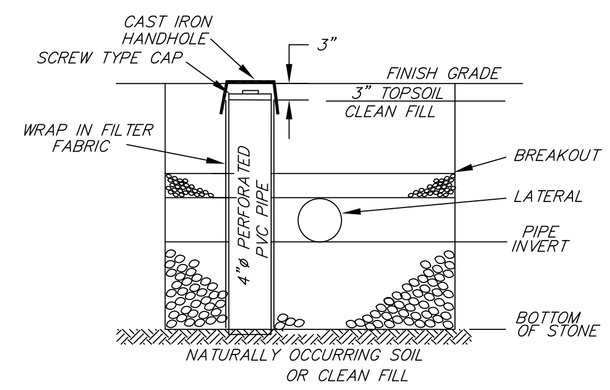

INSPECTION PORT

310 CMR 15.240(13)
(NOT TO SCALE)

OPERATING POINT 48 gpm @ 17.8 TDH
TIME ON: 0.9 minutes

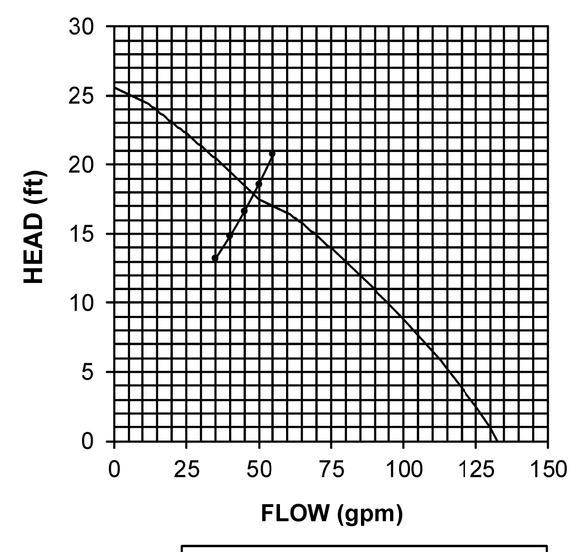

SYSTEM PARAMETERS:

ORIFICE DISCHARGE	**gal/min**	**1.60**
RESIDUAL PRESSURE	*feet*	***4.7***
Based on Flow:		***48 GPM***

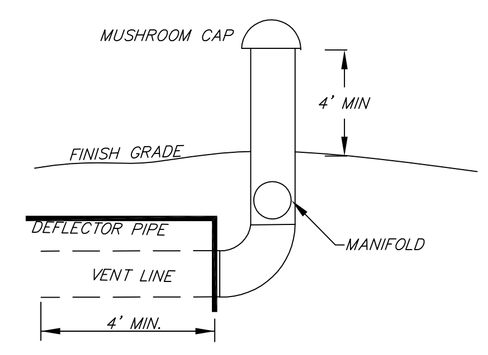

1) VENT LINE/MANIFOLD SHALL BE 4"ø SCH-40 PVC PIPE
2) VENT PIPE SHALL HAVE A CHARCOAL FILTER
3) OWNER SHALL BE CONSULTED REGARDING PLACEMENT OF VENT.

VENT

310 CMR 15.241
(NOT TO SCALE)

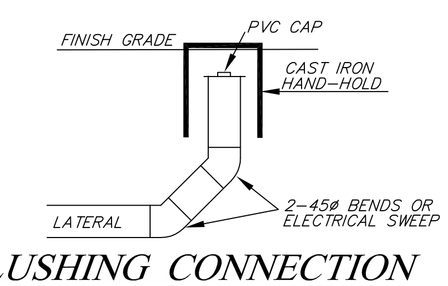

FLUSHING CONNECTION

(NOT TO SCALE)

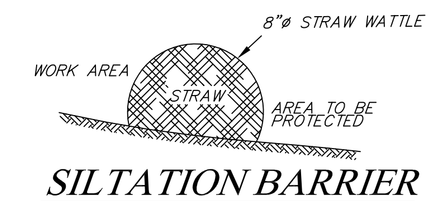

SILTATION BARRIER

(NOT TO SCALE)

SUBSURFACE SEWAGE DISPOSAL SYSTEM UPGRADE

68 MIDDLETON ROAD
BOXFORD, MA 01921

REGISTRY INFORMATION:

DEED:
BOOK NO.: 6964
PAGE NO.: 7

ASSESSORS INFORMATION:

MAP: 32
BLOCK: 2
LOT: 4

PREPARED FOR:

KENNETH SEUS
68 MIDDLETON ROAD
BOXFORD, MA 01921

SCANLAN ENGINEERING LLC
PO BOX 906-GEORGETOWN, MA 01833
PHONE: (978) 372-3440
FAX: (978) 891-3888
EMAIL: info@scanlanengineering.com
WEB: www.scanlanengineering.com

#	BY	DATE	REVISIONS TO PLANS
1	JBS	8/19/19	CONSERVATION ADDITIONS

DATE: JULY 2, 2019
DESIGN BY: JBS
DRAWN BY: JBS

DETAILS & NOTES

SHEET 2 OF 2 SCALE: 1"= 20'

PROJECT # 0964