1) FIRST COMPARTMENT: 660 GALLONS
2) SECOND COMPARTMENT: 330 GALLONS
3) PROVIDED: 2 COMP 1000/500 GALLON MONOLITHIC SEPTIC TANK

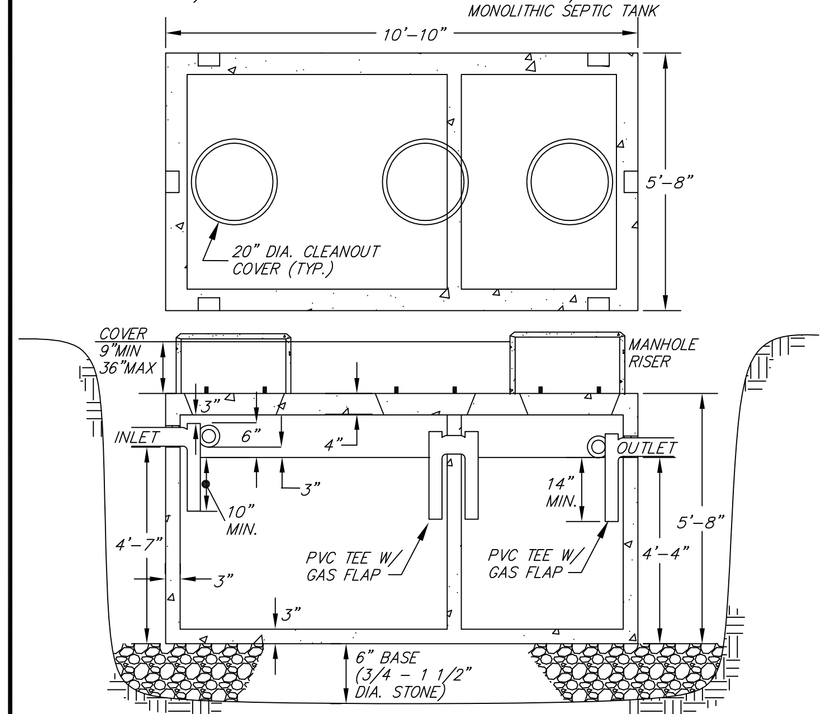

SHEA CONCRETE MODEL TK-M15002C STANDARD, OR EQUAL
WEIGHT OF TANK= 11641 LBS

NOTES:

1) TANK SHALL BE WATERTIGHT THROUGH MANUFACTURER'S SPECIFICATIONS AND WARRANTY.
2) TANK SHALL BE SET LEVEL AND TRUE TO GRADE ON A LEVEL BASE WHICH HAS BEEN MECHANICALLY COMPACTED.
3) TANK SHALL BE EMBOSSED WITH A SEAL STATING THAT ASTM STANDARD C 1227-93 HAS BEEN MET.
4) THE OUTLET TEE SHALL BE EQUIPPED WITH A GAS BAFFLE
5) THE INLET & OUTLET COVERS SHALL HAVE A RISER TO FINISH GRADE.
6) SECURE COVERS TO PREVENT UNAUTHORIZED ACCESS.

1500 GALLON MONOLITHIC SEPTIC TANK

310 CMR 15.223 - 15.228 (NOT TO SCALE)

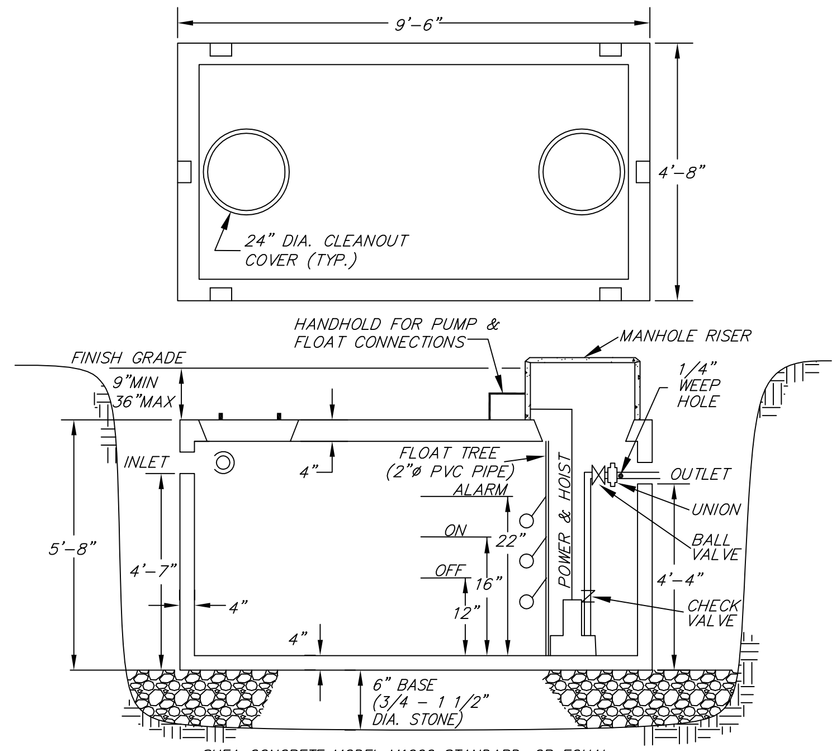

SHEA CONCRETE MODEL M1000 STANDARD, OR EQUAL
WEIGHT OF TANK= 10,800 LBS

NOTES:

1) TANK SHALL BE WATERTIGHT THROUGH MANUFACTURER'S SPECIFICATIONS AND WARRANTY.
2) TANK SHALL BE SET LEVEL AND TRUE TO GRADE ON A LEVEL BASE WHICH HAS BEEN MECHANICALLY COMPACTED.
3) TANK SHALL BE EMBOSSED WITH A SEAL STATING THAT ASTM STANDARD C 1227-93 HAS BEEN MET.
4) PUMP SHALL BE ON A SEPARATE CIRCUIT FROM ALARM.
5) ALARM AND PUMP CONTROLS SHALL BE ACCESSIBLE TO LIVING UNIT.
6) PUMP AND FLOAT CONNECTIONS SHALL BE PLACED IN A HANDHOLD ADJACENT TO THE OUTLET MANHOLE RISER.
7) MANHOLE RISERS REQUIRED: TO-GRADE FOR OUTLET.
8) SECURE COVERS AT-GRADE TO PREVENT UNAUTHORIZED ACCESS.

1000 GALLON MONOLITHIC PUMP CHAMBER

310 CMR 15.231 (NOT TO SCALE)

PUMP SPECIFICATIONS:

MANUFACTURER: LIBERTY PUMPS
MODEL #: LE41M
NO. REQUIRED: ONE (1)
HORSEPOWER: 0.4
PHASE: 1
FULL AMPS 12
DISCHARGE: 2"

PUMP ACCESSORIES:

CONTROL PANEL: LIBERTY SXL24=3 INCLUDED
ALARM: VISUAL & AUDIBLE INCLUDED
FLOATS: PILOT-DUTY FLOAT SWITCHES
NO. REQUIRED: 3

DAILY FLOW:	330	GALLONS/DAY	
SOIL PERC RATE:	<20	MIN/IN	
SOIL TYPE:	Class II	4	DOSES/DAY
VOLUME/DOSE: DOSE	82.5	GALLONS	
PIPE	2.9	GALLONS	
TOTAL	85.4	GALLONS/DAY	
FORCE MAIN:	2	DIA.	

PUMP CHAMBER: (INSIDE DIMENTIONS) 1000 GALLON MONO TANK

LENGTH	8.83	FT
WIDTH	4.00	FT
EFF. DEPTH	4.25	FT
INLET INVERT	101.45	
SUMP	97.20	
OFF	98.20	
ON	98.53	
ALARM	99.03	

STATIC HEAD:

98.20	PUMP OFF	
102.75	DBOX	
Hs= 4.55	FEET	

EQUIVALENT LENGTH: (2" SCH-40 PVC PIPE)

PUMP CHAMBER	1	90 DEGREE BENDS	5
	1	GATE VALVE	1.2
	1	CHECK VALVE	14
		TOTAL	20.2
		USE:	**21**
PIPE RUN	2	90 DEDGREE BENDS	10
	0	45 DEGREE BENDS	0
	0	CHECK VALVE	0
		LENGTH OF PIPE	17.5
		ADDITIONAL LENGTH	2
		TOTAL	29.5
		USE	**30**
		TOTAL EQUIVALENT LENGTH	**51**

SYSTEM CURVE:

Q GPM	V FT/SEC	Hf/100 FT FT/100FT	Hf FT	Hs FT	TDH FT
70	6.31	7.39	3.77	4.55	8.32
75	6.76	8.39	4.28	4.55	8.83
80	7.21	9.46	4.82	4.55	9.37
85	7.66	10.58	5.40	4.55	9.95
90	8.12	11.76	6.00	4.55	10.55
95	8.57	13.00	6.63	4.55	11.18
100	9.02	14.30	7.29	4.55	11.84

OPERATING POINT:

HEAD	**11**	**FT**
FLOW RATE	**95**	**GPM**
TIME ON	**0.9**	**MINUTES**

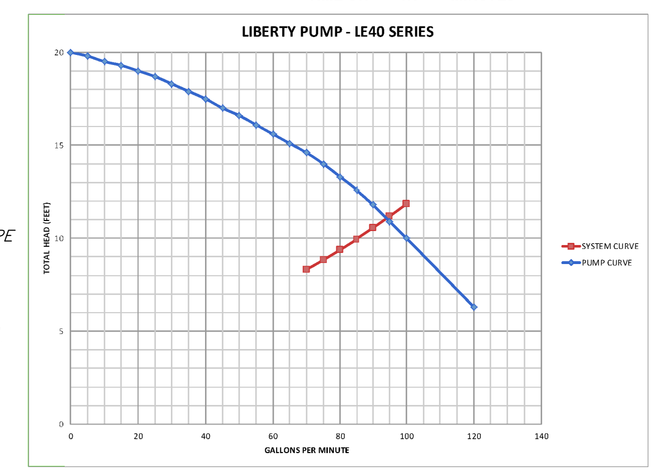

BUOYANCY CALCULATIONS:

	1500 GALLON 2- COMPARTMENT MONO SEPTIC TANK		1000 GALLON MONO PUMP CHAMBER	
FINISH GRADE	104.20		103.70	
MANHOLE GRADE	104.20		103.70	
ESHGW	98.20		97.70	
INLET INVERT	101.75		101.45	
TOP	102.84		102.54	
BOTTOM	97.17		96.87	
BALLAST WEIGHT	0	LBS	0	LBS
WEIGHT OF SOILS	8247	LBS	5260	LBS
WEIGHT OF TANK	11641	LBS	10800	LBS
WEIGHT OF DISPLACED WATER	3947	LBS	2298	LBS
NET FORCES:**	15941	LBS	13763	LBS
FACTOR OF SAFETY:	5.04		6.99	

NOTES:

1. THIS PLAN IS INTENDED ONLY FOR THE CONSTRUCTION OF A SEPTIC SYSTEM TO SERVE THE SITE. NO OTHER USE OF THIS PLAN IS AUTHORIZED. PROPERTY LINES SHOWN HERE-ON ARE APPROXIMATE AND INTENDED ONLY TO SHOW THAT MINIMUM SETBACKS HAVE BEEN MET. NO BOUNDARY SURVEY WAS PERFORMED IN PREPARATION OF THIS PLAN.
2. CONTRACTOR SHALL NOTIFY DIGSAFE AT 1-888-DIG-SAFE (888-233-7233) AT LEAST 72 HOURS PRIOR TO ANY EXCAVATION.
3. CONTRACTOR SHALL MAKE THEMSELVES AWARE OF ALL CONSTRUCTION REQUIREMENTS ASSOCIATED WITH THE JOB.
4. ANY AND ALL REVISIONS TO THE APPROVED PLAN SHALL BE APPROVED BY THE DESIGN ENGINEER AND THE APPROPRIATE TOWN REPRESENTATIVE.
5. CONTRACTOR SHALL BE RESPONSIBLE FOR THE PROJECT WITH RESPECT TO SAFETY METHODS, CONSTRUCTION METHODS AND SUPERVISION OF WORKERS.
6. CONTRACTOR SHALL OBTAIN ALL NECESSARY PERMITS FOR THE PROJECT, AND SHALL BE A LICENSED SEPTIC INSTALLER, IN THE TOWN IN WHICH THE SEPTIC SYSTEM IS BEING INSTALLED.
7. CONTRACTOR SHALL VERIFY LOCATION AND ELEVATION OF BENCHMARKS, PRIOR TO CONSTRUCTION. DESIGN ENGINEER SHALL BE NOTIFIED OF ANY DISCREPANCIES IN THE BENCHMARK ELEVATIONS.
8. CONTRACTOR SHALL CONFIRM THAT THE DESIGN PLAN DETAILS ARE CONSISTENT WITH THE CURRENT MANUFACTURER'S SPECIFICATIONS.
9. APPROVAL OF THE SEPTIC DESIGN, ISSUANCE OF A DISPOSAL SYSTEM CONSTRUCTION PERMIT AND ISSUANCE OF THE CERTIFICATE OF COMPLIANCE SHALL NOT BE CONSTRUED AS A GUARANTEE THAT THE SEPTIC SYSTEM WILL FUNCTION SATISFACTORILY.
10. BACKWASH FROM A WATER SOFTENER SHALL NOT BE DISCHARGED INTO A SEPTIC SYSTEM.
11. WASHING MACHINE, IF CURRENTLY SEPARATE, SHALL BE CONNECTED TO THE PROPOSED SEPTIC SYSTEM.
12. ALL WORK SHALL COMPLY WITH 310CMR15.000 AND LOCAL BOARD OF HEALTH REGULATION, UNLESS VARIANCES/WAIVERS HAVE BEEN APPROVED.
13. ALL WORK OUTSIDE OF THE BUILDING THAT IS LESS THAN 10 FEET FROM THE OUTSIDE FACE OF THE OF THE BUILDING, SHALL CONFORM TO 248CMR2.00, THE STATE PLUMBING CODE.
14. ALL SEPTIC SYSTEM COMPONENTS ARE GREATER THAN 400 FEET FROM SURFACE WATER SUPPLIES AND GREATER THAN 200 FEET FROM ANY TRIBUTARY TO A SURFACE WATER SUPPLY.
15. THERE ARE NO KNOWN WELLS WITHIN 100 FEET OF THE SOIL ABSORPTION SYSTEM OR WITHIN 50 FEET OF ANY SEPTIC COMPONENTS.
16. THERE ARE WETLANDS WITHIN 100 FEET OF THE SOIL ABSORPTION SYSTEM AND WITHIN 100 FEET OF PROJECT.
17. ALL SEPTIC COMPONENTS SHALL BE MARKED WITH MAGNETIC MARKING TAPE OR A COMPARABLE MEANS IN ORDER TO LOCATE THEM ONCE BURIED.
18. SITE COMPLIES WITH 310CMR15.214: NITROGEN LOADING LIMITATIONS.
19. FILL MATERIAL FOR SYSTEMS CONSTRUCTED IN FILL SHALL CONSIST OF SELECT ON-SITE OR IMPORTED SOIL MATERIAL AND SHALL CONFORM TO 310CMR15.255(3).
20. CONTRACTOR SHALL REMOVE FILL, A & B SOIL HORIZON(S) AND OTHER DELETERIOUS MATERIAL WITHIN 5 FT OF SOIL ABSORPTION SYSTEM AND REPLACE WITH FILL MATERIAL (CONFORMING TO 310CMR15.255(3)) UPTO BREAKOUT ELEVATION AND DOWN TO THE DEPTH OF NATURALLY OCCURRING PERVIOUS MATERIAL.
21. COMPONENTS SHALL NOT BE BACKFILLED WITHOUT INSPECTION BY THE BOARD OF HEALTH AND ENGINEER, AND PERMISSION OBTAINED FROM EACH.
22. VEHICULAR TRAFFIC, PARKING OF VEHICLES, STOCKPILING OF MATERIALS AND STORAGE OF EQUIPMENT OVER LEACHING AREA IS PROHIBITED.
23. THE EXISTING SEPTIC SYSTEM SHALL BE EITHER CRUSHED AND FILLED WITH CLEAN FILL, OR REMOVED, AS PER 310CMR15.00.
24. CONTRACTOR SHALL VERIFY THAT THE SEPTIC TANK CAN BE CONNECTED TO THE BUILDING SEWER AS SHOWN, WITH A MINIMUM 2% SLOPE. IF NOT, CONTRACTOR SHALL NOTIFY ENGINEER, IMMEDIATELY.
25. THERE ARE FRESHWATER WETLANDS WITHIN 100 FEET OF THE SEPTIC SYSTEM. THIS PLAN SHALL ACCOMPANY A NOTICE OF INTENT FILED WITH THE LOCAL CONSERVATION COMMISSION AND THE MASSACHUSETTS DEPARTMENT OF ENVIRONMENTAL PROTECTION.
26. WETLAND ONSITE WERE DELINEATED BY JULIE VONDRAK, SEPTEMBER, 2020.
27. SYSTEM SHALL BE INSTALLED ACCORDING TO THE STANDARD CONDITIONS FOR ALTERNATIVE SOIL ABSORPTION SYSTEMS APPROVED FOR REMEDIAL USE REVISED: MARCH 5, 2018 AND THE PRESBY REMEDIAL USE APPROVAL REVISED OCTOBER 30, 2019. A COPY OF EACH SHALL BE KEPT ON-SITE, AT ALL TIMES.
28. SYSTEM TO BE INSTALLED IN ACCORDANCE WITH PRODUCT DESIGN AND INSTALLATION MANUAL, STATE AND LOCAL REGULATIONS. FOR PRODUCT INFORMATION OR THE NEAREST DEALER CONTACT PRESBY ENVIRONMENTAL, INC. 143 AIRPORT ROAD, WHITEFIELD, NH 03598 PHONE: 1-800-473-5298 WEB: WWW.PRESBYENVIRONMENTAL.COM
29. INSTALLER MUST HAVE BEEN TRAINED AND BE CERTIFIED BY PRESBY ENVIRONMENTAL, INC., AS AN ENVIRO-SEPTIC INSTALLER.
30. APPROVAL OF THE PRESBY ENVIRO-SEPTIC PIPE REQUIRES A NOTICE DISCLOSING THE EXISTENCE OF THE ALTERNATIVE SEPTIC SYSTEM SUBJECT TO THIS APPROVAL ON THE PROPERTY. THE NOTICE SHALL BE MARGINALLY REFERENCED ON THE DEED, AS PER THE MASSACHUSETTS DEPARTMENT OF ENVIRONMENTAL PROTECTION APPROVAL FOR REMEDIAL USE OF THE PRESBY ENVIRO-SEPTIC PIPE.
31. JAMES SCANLAN, P.E. (DESIGN ENGINEER) PASSED THE PRESBY ENVIRONMENTAL, INC., ENVIRO-SEPTIC CERTIFICATION COURSE, AUGUST 29, 2006 (CERTIFICATE NO: 3357MAES).
32. PROOF OF RECORDING OF THE DEED NOTIFICATION, FOR THE PRESBY SYSTEM SHALL BE SUBMITTED TO BOARD OF HEALTH PRIOR TO ISSUANCE OF THE CERTIFICATE OF COMPLIANCE, BY THE BOARD OF HEALTH.
33. CONTRACTOR SHALL PROVIDE 24 HOUR NOTICE TO THE DESIGN ENGINEER TO INSPECT CONSTRUCTION AT THE FOLLOWING TIMES:
   A) TO INSPECT INSTALLED TANKS - PRIOR TO BACKFILLING
   B) TO INSPECT THE BOTTOM OF EXCAVATION - PRIOR TO SAND PLACEMENT
   C) TO INSPECT THE FINAL INSTALLATION - PRIOR TO BACKFILLING
34. THE EXISTING SYSTEM AND SYSTEM SAND SHALL BE REMOVED DOWN TO ORIGINAL, CLEAN SOIL BELOW LEACH AREA AND REPLACED WITH FILL MATERIAL (CONFORMING TO 310CMR15.255(3)). THE DEPTH OF THE EXISTING SYSTEM SAND WAS FOUND APPROXIMATELY 6-7 FEET BELOW GRADE.

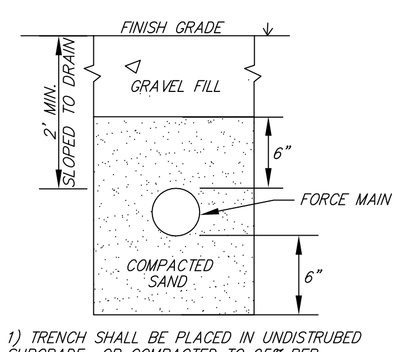

1) TRENCH SHALL BE PLACED IN UNDISTRUBED SUBGRADE OR COMPACTED TO 95% PER ASTM D-1557

FORCE MAIN TRENCH

310 CMR 15.221(6) (NOT TO SCALE)

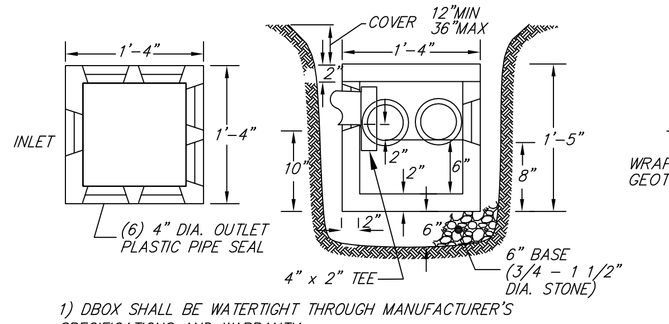

1) DBOX SHALL BE WATERTIGHT THROUGH MANUFACTURER'S SPECIFICATIONS AND WARRANTY.
2) SPEED-LEVELLERS SHALL BE INSTALLED IN OUTLET PIPES.
3) OUTLET PIPES SHALL BE LEVEL FOR THE FIRST TWO FEET (MIN.).
4) OUTLET PIPES SHALL BE CEMENTED TO DBOX USING HYDRAULIC CEMENT

DISTRIBUTION BOX (6-OUTLET)

310 CMR 15.232 (NOT TO SCALE)

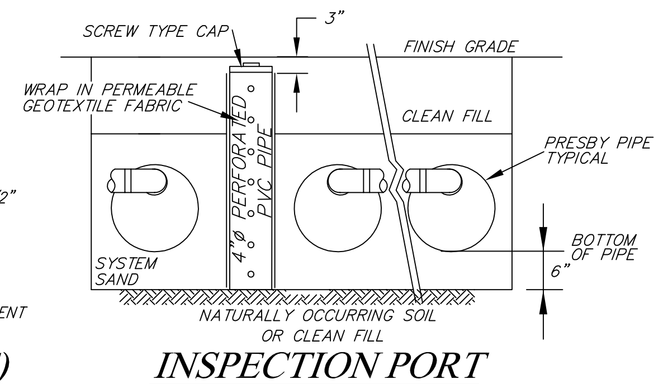

INSPECTION PORT

310 CMR 15.240(13) (NOT TO SCALE)

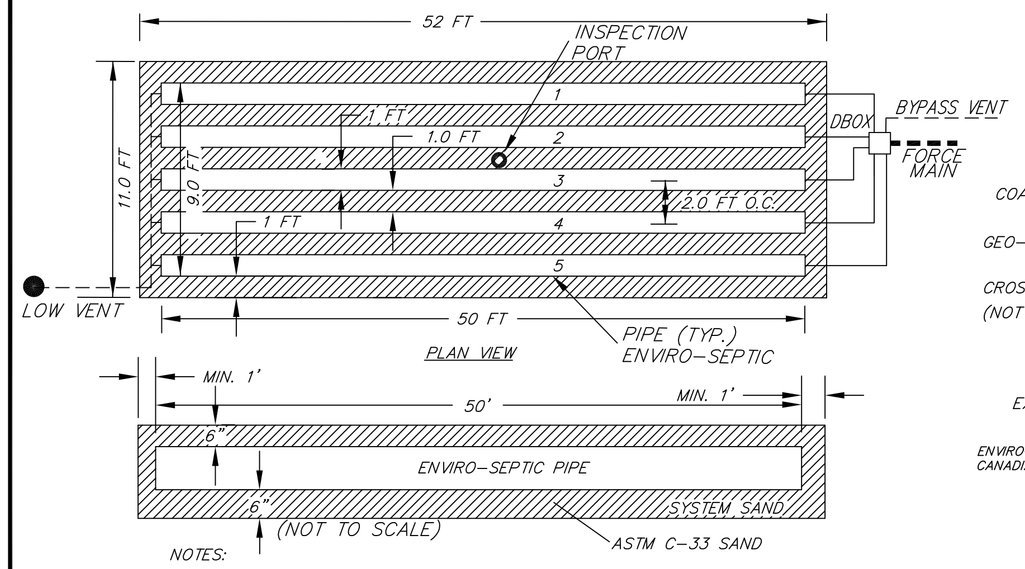

NOTES:

- TOPSOIL AND ORGANIC MATERIAL TO BE REMOVED FROM DISPOSAL AREA PRIOR TO PLACING SAND OR FILL.
- FINAL GRADING TO SHED SURFACE WATER AWAY FROM SYSTEM COMPONENTS.
- MIN 10" / MAX 18" COVER OVER ENVIRO-SEPTIC PIPE

SIDE VIEW

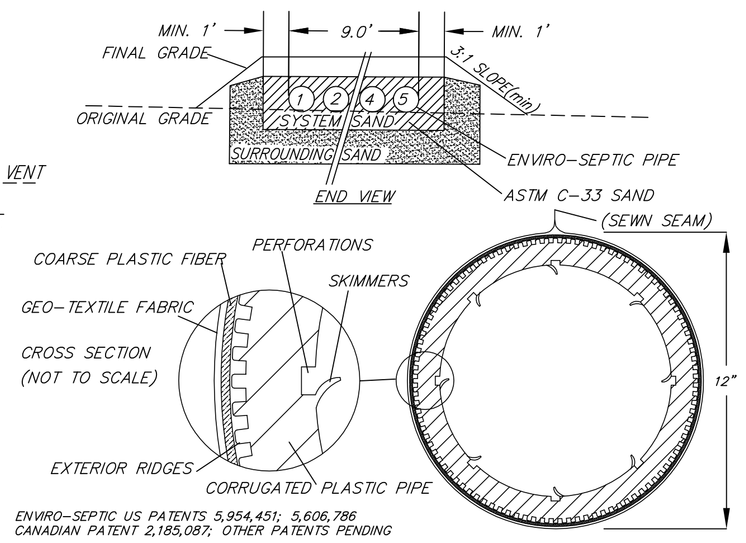

ENVIRO-SEPTIC US PATENTS 5,954,451; 5,606,786
CANADIAN PATENT 2,185,087; OTHER PATENTS PENDING

- ENVIRO-SEPTIC PIPE REQUIRED: 210 LINEAR FEET
- ENVIRO-SEPTIC PIPE PROVIDED: 250 LINEAR FEET
- INSTALL 5 LINES OF ENVIRO-SEPTIC PIPE 50' LONG
- PIPE SPACING 2.0 FT ON CENTER
- OFFSET ADAPTERS MUST BE POSITIONED AT 12 O'CLOCK

PRESBY ENVIRO-SEPTIC® LEACH FIELD DETAIL:

310 CMR 15.252 (NOT TO SCALE)

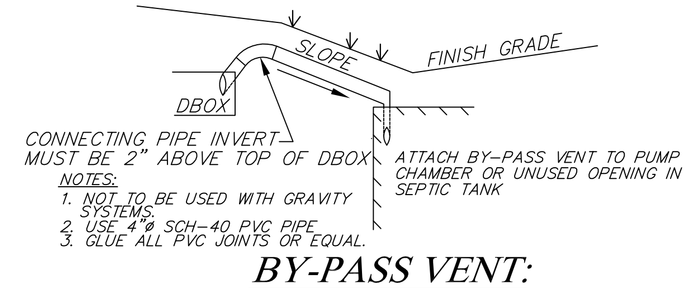

NOTES:

1. NOT TO BE USED WITH GRAVITY SYSTEMS.
2. USE 4"ø SCH-40 PVC PIPE
3. GLUE ALL PVC JOINTS OR EQUAL.

BY-PASS VENT:

(NOT TO SCALE)

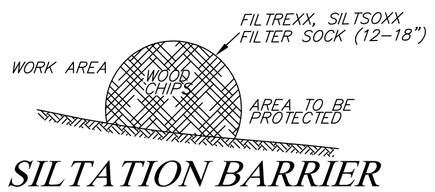

SILTATION BARRIER

(NOT TO SCALE)

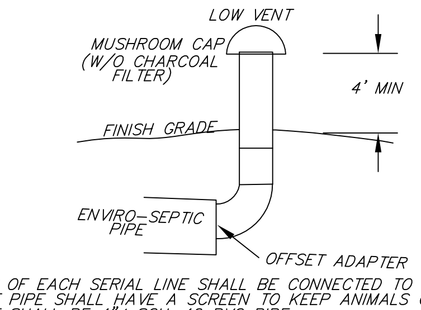

1) ENDS OF EACH SERIAL LINE SHALL BE CONNECTED TO VENT MANIFOLD.
2) VENT PIPE SHALL HAVE A SCREEN TO KEEP ANIMALS OUT
3) VENT SHALL BE 4"ø SCH-40 PVC PIPE
4) OWNER SHALL BE CONSULTED REGARDING PLACEMENT OF VENTS.
5) INSTALL LOW VENT. HIGH VENT SHALL VENT THROUGH SEPTIC TANK

LOW VENT:

(NOT TO SCALE)

SUBSURFACE SEWAGE DISPOSAL SYSTEM UPGRADE

223B MAIN STREET
BOXFORD MA

REGISTRY INFORMATION:

DEED:
BOOK NO.: 35709
PAGE NO.: 16

ASSESSORS INFORMATION:

MAP: 23
BLOCK: 1
LOT: 5.2

PREPARED FOR:

MICHAEL VIGNEAULT
223B MAIN STREET
BOXFORD MA

SCANLAN ENGINEERING LLC
PO BOX 906-GEORGETOWN, MA 01833
PHONE: (978) 372-3440
FAX: (978) 891-3888
EMAIL: info@scanlanengineering.com
WEB: www.scanlanengineering.com

#	BY	DATE	REVISIONS TO PLANS

DATE:	OCTOBER 1, 2020
DESIGN BY:	JBS
DRAWN BY:	JBS

DETAILS & NOTES

SHEET 2 OF 2 | SCALE: 1"= 20'

PROJECT # 1040